MECHANICAL DRAWING



OAD-00015016

FSP400-50WDB(F660001)

Date:2026-02-04 14:11

A classified document Level: Confidential All rights reserved

Date:2026-02-04 14:11
EOAD-00015016-R01.pdf
1/1 Please keep it private and confidential.

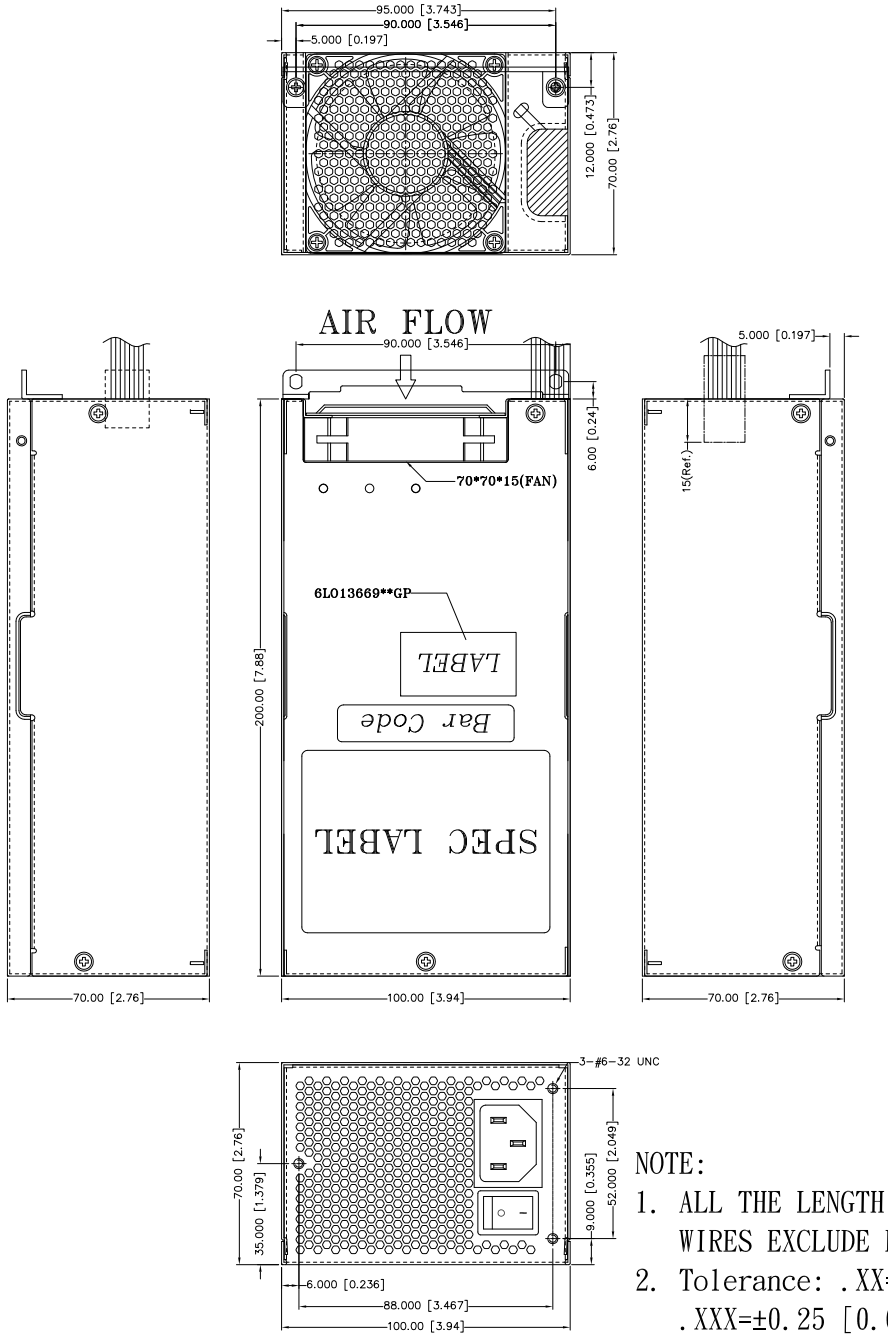

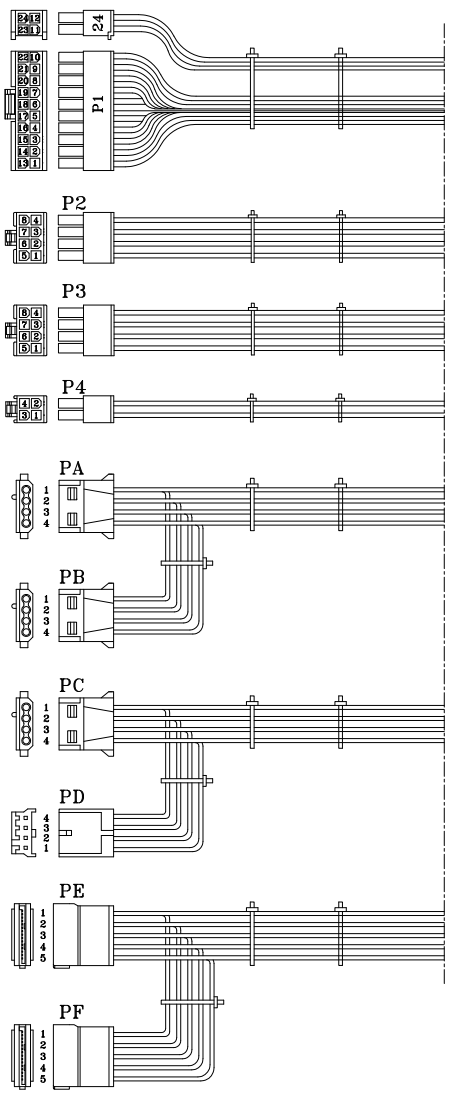

REF. ID.	PIN NO.	SIGNAL	WIRE COLOR	GAUGE	CONNECTOR TYPE	CABLE LENGTH
P1/24	1	+3.3V	ORANGE	18	WST P20-I42002K11D +P4-I42002K11D or EQUIV.	500±15mm
	2	+3.3V	ORANGE	18		
	3	COM	BLACK	18		
		COM	BLACK	24		
	4	+5V	RED	18		
	5	COM	BLACK	18		
	6	+5V	RED	18		
	7	COM	BLACK	18		
	8	PW-OK	GRAY	24		
	9	+5Vsb	PURPLE	18		
	10	+12V	YELLOW	18		
	11	+12V	YELLOW	18		
	12	+3.3V	ORANGE	18		
	13	+3.3V	ORANGE	18		
		+3.3Vsense	BROWN	24		
	14	-12V	BLUE	24		
	15	COM	BLACK	18		
	16	PS-ON	GREEN	24		
	17	COM	BLACK	18		
	18	COM	BLACK	18		
	19	COM	BLACK	18		
	20	-5V	WHITE	24		
	21	+5V	RED	18		
	22	+5V	RED	18		
	23	+5V	RED	18		
	24	COM	BLACK	18		
P2/P3	1	COM	BLACK	18	WST P8-I42002K21B-B or EQUIV.	500±15mm
	2	COM	BLACK	18		
	3	COM	BLACK	18		
	4	COM	BLACK	18		
	5	+12V	YELLOW	18		
	6	+12V	YELLOW	18		
	7	+12V	YELLOW	18		
	8	+12V	YELLOW	18		
P4	1	COM	BLACK	18	MOLEX 39-01-2040 or EQUIV.	500±15mm
	2	COM	BLACK	18		
	3	+12V	YELLOW	18		
	4	+12V	YELLOW	18		
PA	1	+12V	YELLOW	20	WST P4-A10202 or EQUIV.	500±15mm
	2	COM	BLACK	20		
	3	COM	BLACK	20		
	4	+5V	RED	20		
PB	1	+12V	YELLOW	20	WST P4-A10202 or EQUIV.	150±10mm
	2	COM	BLACK	20		
	3	COM	BLACK	20		
	4	+5V	RED	20		
PC	1	+12V	YELLOW	20	WST P4-A10202 or EQUIV.	500±15mm
	2	COM	BLACK	20		
	3	COM	BLACK	20		
	4	+5V	RED	20		
PD	1	+5V	RED	22	AMP 171822-4 or EQUIV.	150±10mm
	2	COM	BLACK	22		
	3	COM	BLACK	22		
	4	+12V	YELLOW	22		
PE	1	+3.3V	ORANGE	20	MOLEX SD-67582-001 or EQUIV.	500±15mm
	2	COM	BLACK	20		
	3	+5V	RED	20		
	4	COM	BLACK	20		
	5	+12V	YELLOW	20		
PF	1	+3.3V	ORANGE	20	MOLEX SD-67582-001 or EQUIV.	150±10mm
	2	COM	BLACK	20		
	3	+5V	RED	20		
	4	COM	BLACK	20		
	5	+12V	YELLOW	20		

NOTE:
1. ALL THE LENGTH OF OUTPUT WIRES EXCLUDE HOUSING.
2. Tolerance: .XX=±0.5 [0.02]、.XXX=±0.25 [0.01]

UNIT:mm

P/N.:9PA400MS01

MODEL NO.: FSP400-50WDB(F660001)		TITLE: ASSY	SHEET: 1 OF 1	REV:01
R&D(2)	PE	DRAWN	DATE	
		周書宇	FEB.04.2026	
INTERIOR COUNTERSIGN:				