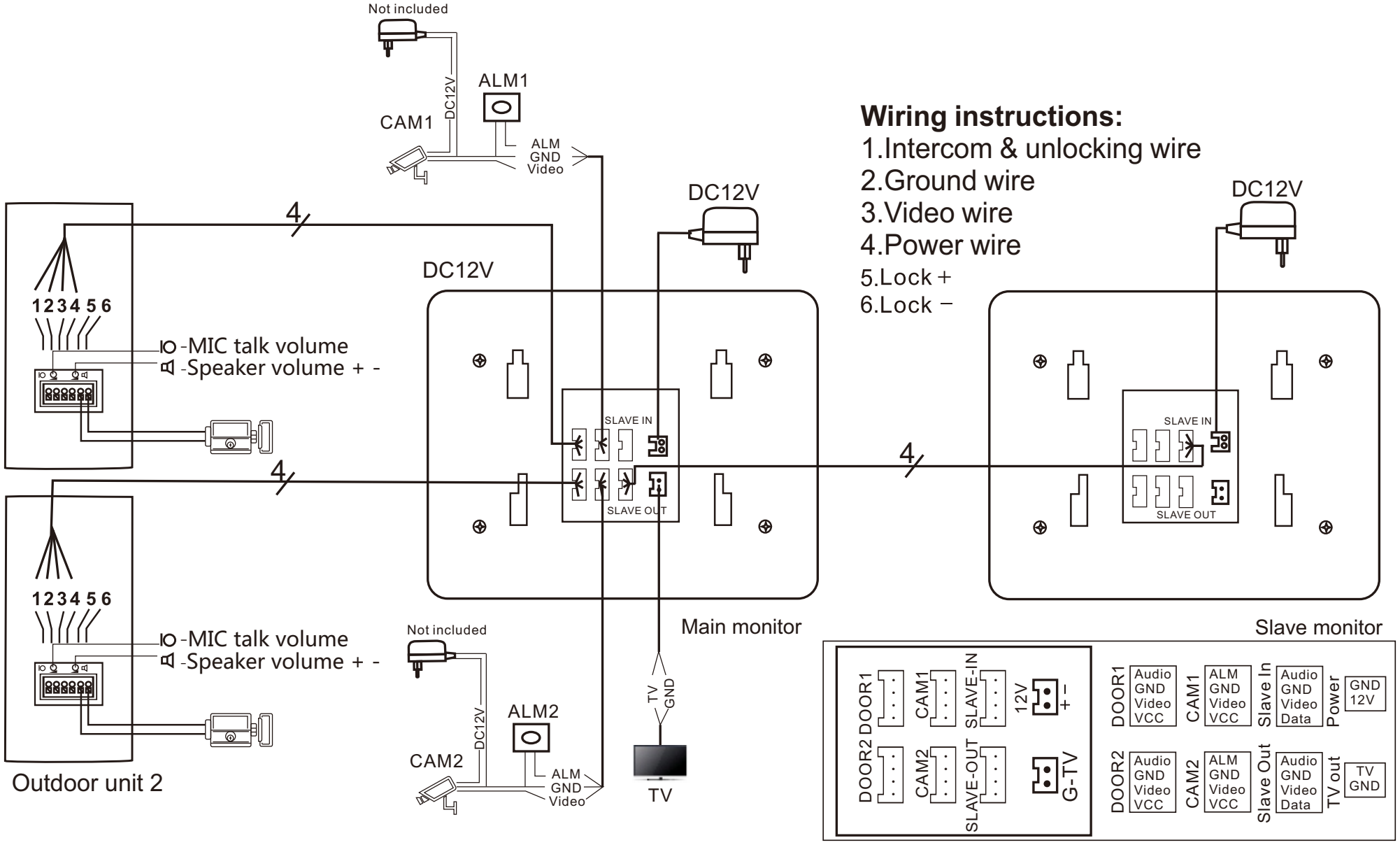
Not included
DC12V
ALM1
CAM1
ALM
GND
Video
DC12V
DC12V
DC12V
Wiring instructions:
1.Intercom & unlocking wire
2.Ground wire
3.Video wire
4.Power wire
5.Lock +
6.Lock −
4
4
4
1 2 3 4 5 6
-MIC talk volume
-Speaker volume + -
SLAVE IN
SLAVE OUT
SLAVE IN
SLAVE OUT
1 2 3 4 5 6
-MIC talk volume
-Speaker volume + -
Outdoor unit 2
Not included
DC12V
ALM2
CAM2
ALM
GND
Video
TV
GND
TV
Main monitor
Slave monitor
DOOR1
CAM1
SLAVE-IN
12V
+ −
DOOR2
CAM2
SLAVE-OUT
G-TV
DOOR1
Audio
GND
Video
VCC
CAM1
ALM
GND
Video
VCC
Slave In
Audio
GND
Video
Data
Power
GND
12V
DOOR2
Audio
GND
Video
VCC
CAM2
ALM
GND
Video
VCC
Slave Out
Audio
GND
Video
Data
TV out
TV
GND