迎廣科技股份有限公司
IN WIN DEVELOPMENT INC.
桃園市龜山區南上路 350 巷 57 號
NO.57, LANE 350, NANSHANG ROAD, GUISHAN DISTRICT,
TAOYUAN CITY, TAIWAN, R.O.C
TEL: 886-3-3229898 FAX: 886-3-3527317 http://www.in-win.com

Switching Power Supply Electrical Specification

MODEL：IP-S265AU7-2

REV.	**Description**	Issue Date	Electrical	Auditing	Approved
0.1	Initial Release	2014/02/20	陳建民	蔡靖薇	陳裕凱
1.0	修改 2.6 Efficiency	2014/4/23	陳建民	蔡靖薇	陳裕凱
1.1	TAI1510021 PCT 改 EAC	2015/03/09	陳建民	蔡靖薇	陳裕凱
1.2	TAI15B0004 新增 CCC	2015/11/09	陳建民	蔡靖薇	陳裕凱
1.3	Added Erp Lot6 2013 on page 4	2015/12/21	陳建民	蔡靖薇	陳裕凱
1.4	ADD 3.4 UVP FUNCTION DESCRIPTION	2019/8/12	陳建民	蔡靖薇	陳裕凱
1.5	ADD cTUVus	2020/12/17	陳建民	蔡靖薇	陳裕凱
1.6	**2.2.2 5V+3.3V 修正**	**2021/12/07**	**陳建民**	**蔡靖薇**	**陳裕凱**

桃園市龜山區南上路 350 巷 57 號
NO.57, LANE 350, NANSHANG ROAD, GUISHAN DISTRICT,
TAOYUAN CITY, TAIWAN, R.O.C
TEL: 886-3-3229898 FAX: 886-3-3527317 http://www.in-win.com

MODEL：IP-S265AU7-2

CONTENTS

1. General Requirements. 4
2. Electrical Requirements. 4
2.1 AC Line Input Requirements. 4
2.1.1 Inrush Current Limiting 4
2.1.2 Input Fuse Requirement 4
2.2 DC Output Requirements. 5
2.2.1 DC Output Voltage Regulation. 5
2.2.2 DC Output Load Current Ranges. 5
2.3 Cross Regulation Load Current Is Characteristics. 6
2.4 Ripple & Noise Specification. 6
2.5 Remote Sensing. 7
2.6 Efficiency. 7
2.7 Voltage Hold-up Time. 7
3. Output Protection. 8
3.1 Over Voltage Protection.(OVP). 8
3.2 Short Circuit Protection.(SCP). 8
3.3 Over Power Protection.(OPP) 8
3.4 Under Voltage Protection.(UVP). 8
4. Power On/Off Timing Requirements. 9
4.1 Remote On /Off. 9
4.2 Rise time. 10
4.3 Power Good Signal. 10
4.4 DC Return to frame connection. 10
4.5 Turn On/Turn Off Delay. 10
4.6 Overshoot at Turn-On/Turn-Off. 11
4.7 Reset after Shut down. 11
5. Mechanical Requirements. 11
5.1 Labeling/Marking 11
5.2 Physical Dimensions 11
5.3 Fan 11
6. Environmental Requirements. 12
6.1 Temperature. 12
6.2 Humidity. 12

迎廣科技股份有限公司
110. 12. -8
發行章
研發部

6.3 Altitude.....12
6.4 Vibration Test.....12
6.4.1 Non-Operating.....12
6.5 Mechanical Shock.....12
6.5.1 Non-Operating.....12
6.6 Cooling and Acoustics.....12
7. EMI......13
8. Safety Requirements.....13
9. Reliability.....13
9.1 M.T.B.F.....13
9.2 AC Cycles.....13
10. Production Testing.....13
10.1 Hi-Pot Test.....13
10.2 Insulation Resistance.....13
10.3 Leakage Current.....13
10.4 Earth Grounding Test.....13

迎廣科技股份有限公司
110. 12. -8
電子研發部發行章

桃園市龜山區南上路 350 巷 57 號
NO.57, LANE 350, NANSHANG ROAD, GUISHAN DISTRICT,
TAOYUAN CITY, TAIWAN, R.O.C
TEL: 886-3-3229898 FAX: 886-3-3527317 http://www.in-win.com

1. General Requirements.

This specification describes a 265 watts, 6 output level power supply. This specification also defines worldwide safety requirements and manufactures process test requirements.
With +5V stand-by and remote ON/OFF control for ITX system.
With Active PFC function to meet EN61000-3-2,class D harmonic current requirement.
Also, 5Vsb power is less than 0.5W input at power off mode (PS_ON input at high state) which is comply with ErP Lot6 2013 requirement.

2. Electrical Requirements.

The electrical requirements that follow are to be met over the environmental ranges specified in section 6 of this document unless otherwise noted.

2.1 AC Line Input Requirements.

Table 2.1 lists AC input voltage and frequency requirements for continuous operation. The power supply shall be capable of supplying full-rated output power over input voltage ranges rated 100-240Vac rms nominal.

Input	Min.	Nom.	Max.
Vin (Vrms)	90	100-240	264
Iin (Arms)	--	5.0	--
Frequency (Hz)	47	50-60	63

Table 2.1 AC Input Line Requirements

2.1.1 Inrush Current Limiting

The inrush current of 115/230Vac ON shall not damage

迎廣科技股份有限公司
110. 12. -8
發行章
研發部

2.1.2 Input Fuse Requirement

The power supply shall be protected from primary over current by input fuse rated at 5A/250V.

桃園市龜山區南上路 350 巷 57 號
NO.57, LANE 350, NANSHANG ROAD, GUISHAN DISTRICT,
TAOYUAN CITY, TAIWAN, R.O.C
TEL: 886-3-3229898 FAX: 886-3-3527317 http://www.in-win.com

2.2 DC Output Requirements.

2.2.1 DC Output Voltage Regulation.

The DC outputs voltages of the power supply measured at the end of the connectors shall be remain within the regulation ranges shown in Table 2.2.1.

The +3.3Vdc output should have provisions for remote sensing to compensate for excessive cable drops. The default sense should be connected to pin 13 of the main power.

Output	Range	Min.	Nom.	Max.	Unit
+5Vdc	±5%	4.75	5.00	5.25	Volts.
+12V1dc	±5%	11.4	12.00	12.6	Volts.
+12V2dc	±5%	11.4	12.00	12.6	Volts.
-12Vdc	±10%	-10.8	-12.00	-13.2	Volts.*
+3.3Vdc	±5%	3.14	3.30	3.47	Volts.
+5Vsb	±5%	4.75	5.00	5.25	Volts.

*For total Power 10%-80%

Table 2.2.1 DC Output Voltage Regulation Ranges

2.2.2 DC Output Load Current Ranges.

DC O/P Load	Min. Current	Max. Current/Peak	Unit
+5Vdc	0.2	10	Amps.
+12V1dc	0.1	15/18	Amps.
+12V2dc	0.5	15/18	Amps.
-12Vdc	0.0	0.3	Amps.
+3.3Vdc	0.1	10	Amps.
+5Vsb	0	2.0/2.5	Amps.

Table 2.2.2 DC Output Load Current Ranges

迎廣科技股份有限公司
110. 12. -8
測發行章
子研發部

Note:
(1) +5V & +3.3V Total output not exceed **60W**
(2) +12V1 & +12V2 Total output not exceed 228W
(3) Total output for this subject power not exceed 265W
(4) +12V Total output max load, +5Voutput load not be under 3.0Amps.

桃園市龜山區南上路 350 巷 57 號
NO.57, LANE 350, NANSHANG ROAD, GUISHAN DISTRICT,
TAOYUAN CITY, TAIWAN, R.O.C
TEL: 886-3-3229898 FAX: 886-3-3527317 http://www.in-win.com

2.3 Cross Regulation Load Current Is Characteristics

NO.	LOAD CONDITION	OUTPUT LOAD (A)					
		+5V	+12V1	+12V2	-12V	+3.3V	+5Vsb
1	COND.1	6	9	8	0.3	5	2
2	COND.2	4.8	7.2	6.4	0.24	4	1.6
3	COND.3	3	4.5	4	0.15	2.5	1
4	COND.4	10	8	8	0.3	3	2
5	COND.5	5	4	4	0.15	1.5	1
6	COND.6	5	8	8	0.3	10	2
7	COND.7	2.5	4	4	0.15	5	1
8	COND.8	3	15	4	0.3	2	2

Table 2.3 DC Output Current Load Range

2.4 Ripple & Noise Specification.

Output	Max. Ripple & Noise (mV)
+5 Vdc	50
+12 V1dc	120
+12 V2dc	120
-12 Vdc	120
+3.3 Vdc	50
+5 Vsb	50

Table 2.4 Ripple & Noise Specification

迎廣科技股份有限公司
110. 12. -8
發行章
研發部

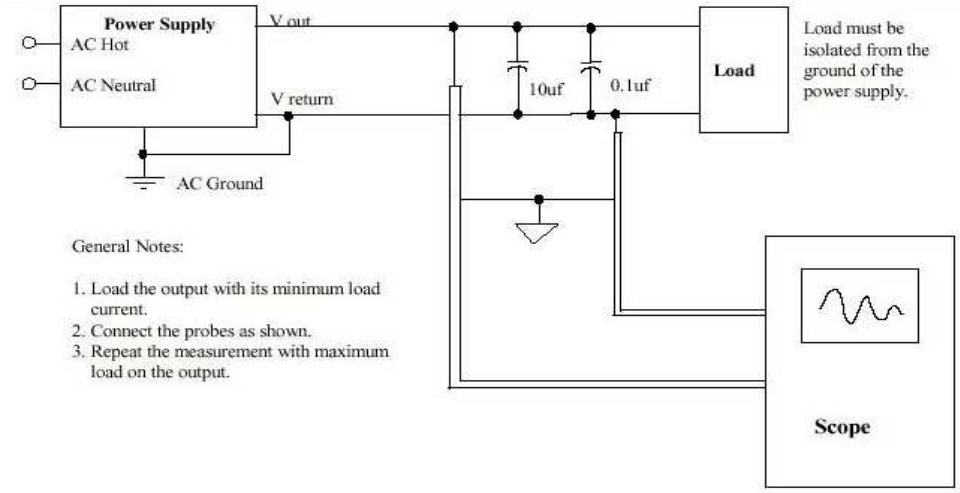

Figure 2.4 Differential Noise Test Setup

桃園市龜山區南上路 350 巷 57 號
NO.57, LANE 350, NANSHANG ROAD, GUISHAN DISTRICT,
TAOYUAN CITY, TAIWAN, R.O.C
TEL: 886-3-3229898 FAX: 886-3-3527317 http://www.in-win.com

Note:

1. Ripple & noise test: The oscilloscope bandwidth is set at 20MHz.
2. Add a 0.1 μF capacitor in parallel with a 10 μF tantalum capacitor at output connector terminals for ripple & noise measurements, See Figure 2.4.

2.5 Remote Sensing.

The +3.3 Vdc output should have provisions for remote sensing to compensate for excessive cable drops. The default sense should be connected to pin 13 of the main power.

2.6 Efficiency.

The efficiency of the power supply during normal operation shall be 82% minimum measured nominal line input voltage and maximum output loading.

The loading condition for testing efficiency shown in Table 2.6 represents a Full loaded system, a Typical loaded system, and a Light loaded system.

Loading	+5V	+12V1	-12V	+3.3V	+5Vsb
Full (A)	6.3	16.7	0.3	6.3	1.8
Typical (A)	3.2	8.4	0.1	3.2	0.9
Light (A)	1.3	3.3	0.1	1.3	0.4

Loading	FULL	Typical	Light
Efficiency %	82%	85%	82%

Table 2.6 Loading table for Efficiency measurements

2.7 Voltage Hold-up Time

The power supply should maintain output regulation per Section 2.1 despite a loss of input power low-end nominal range 230 Vac / 50 Hz & 115 Vac / 60 Hz—at 70% load output load as applicable for a minimum of 16ms.

迎廣科技股份有限公司
110. 12. -8
發行章
電子研發部

桃園市龜山區南上路 350 巷 57 號
NO.57, LANE 350, NANSHANG ROAD, GUISHAN DISTRICT,
TAOYUAN CITY, TAIWAN, R.O.C
TEL: 886-3-3229898 FAX: 886-3-3527317 http://www.in-win.com

3. Output Protection.

If the power supply goes into shutdown stage(when OVP，SCP，OPP is working), the power supply shall return to normal operation only after the fault has been removed and remote signal must reset for a minimum of 1 second. Then power supply shall be turn on again.

3.1 Over Voltage Protection.(OVP)

The power supply +5Vdc, +3.3Vdc, +12V1dc,+12V2dc outputs shall be protected from over voltage condition caused by any single fault of the circuitry or by the injection of external over voltage to the output connectors. The power supply shall be in the latch mode with the over voltage limits defined in Table 3.1.

Output	Nom.	Max.	Unit
+5Vdc	6.3	7.0	Volts
+12V1dc	15.0	15.6	Volts
+12V2dc	15.0	15.6	Volts
+3.3Vdc	4.2	4.5	Volts

Table 3.1 Over Voltage Protection Limits

迎廣科技股份有限公司
110. 12. -8
發行章
研發部

3.2 Short Circuit Protection.(SCP)

A short circuit placed between DC return and output (Approximately 0.1Ω) shall cause no damage and the main output shall shutdown and latch off.

3.3 Over Power Protection.(OPP)

When Over Power Protection occurred the power supply will shutdown and Latch-up which can't recovery after removal fault except recycle the AC Line.
The power supply must limit 397.5W. For testing purposes, the over load currents should be ramped at a minimum rate of 10 A/s starting from full load.

3.4 Under Voltage Protection.(UVP)

In an under voltage fault occurs, the supply will latch all DC outputs into a shutdown state when +12V1,+12V2,+5V & +3.3V outputs under 60% of it's maximum value.

4. Power On/Off Timing Requirements.

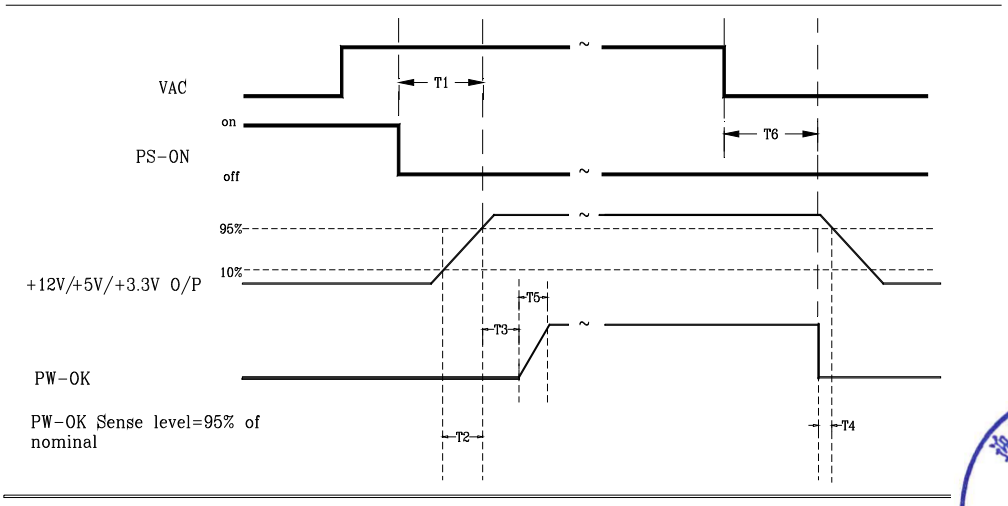

Figure 4. Power Supply Timing

迎廣科技股份有限公司
110. 12. -8
電子研發部 發行章

4.1 Remote On /Off.

PS_ON# is an active-low, TTL-compatible signal that allows a motherboard to remotely control the power supply in conjunction with features such as soft on/off, Wake on LAN, or wake-on-modem. When PS_ON# is pulled to TTL low, the power supply should turn on the five main DC output rails: +5Vdc, +12V1dc, +12V2dc, +3.3Vdc and -12Vdc. When PS_ON# is pulled to TTL high or open-circuited, the DC output rails should not deliver current and should be held at zero potential with respect to ground. PS_ON# has no effect on the +5Vsb output, which is always enabled whenever the AC power is Present. Table 4.1 lists PS_ON# signal characteristics.

The power supply shall provide an internal pull-up to TTL high. The power supply shall also provide debouche circuitry on PS_ON# to prevent it from oscillating on/off at startup when activated by a mechanical switch. The DC output enable circuitry must be SELV-compliant.

	Min.	Max.
VIL, Input Low Voltage	0.0 V	0.8 V
IIL, Input Low Current (Vin = 0.4 V)		-1.6 mA
VIH, Input High Voltage (Iin = -200 µA)	2.0 V	
VIH open circuit, Iin = 0		5.25 V

Table 4.1 PS-ON# Signal Characteristics

桃園市龜山區南上路 350 巷 57 號
NO.57, LANE 350, NANSHANG ROAD, GUISHAN DISTRICT, TAOYUAN CITY, TAIWAN, R.O.C
TEL: 886-3-3229898 FAX: 886-3-3527317 http://www.in-win.com

4.2 Rise time.

The +5Vdc and +3.3Vdc output shall rise from 10% to 90% of nominal voltage specified in Section 2.1 within 0.2ms to 20ms maximum.

4.3 Power Good Signal.

PWR_OK is a 'power good' signal. It should be asserted high by the power supply to indicate that the +5Vdc, +12V1dc, +12V2dc and +3.3Vdc outputs are above the under voltage thresholds listed in Section 2.1 and that sufficient mains energy is stored by the converter to guarantee continuous power operation within specification for at least the duration specified in Section 2.8,'Voltage Hold-up Time' Conversely, PWR_OK should be de asserted to a low state when any of the +12V1dc, +12V2dc, +5Vdc, or +3.3Vdc output voltages falls below its under voltage threshold, or when mains power has been removed for a time sufficiently long such that power supply operation cannot be guaranteed beyond the power-down warning time. The electrical and timing characteristics of the PWR_OK signal are given in Table 4.3 and in Figure 4.

Signal Type	+5 V TTL compatible
Logic level low	< 0.4 V while sinking 4 mA
Logic level high	Between 2.4 V and 5 V output while sourcing 200 µA
High-state output impedance	1KΩ from output to common
Power on time	T1 <500ms
PWR_OK delay	100 ms < T3 < 500 ms
PWR_OK rise time	T5 ≦10 ms
AC loss to DC output hold-up time	T6 ≧16 ms 70% LOAD
Power-down warning	T4 ≧1 ms

Table 4.3 Power Good Signal Characteristics

4.4 DC Return to frame connection.

DC return shall be direct connected to frame ground.

迎廣科技股份有限公司 110. 12. -8 發行章 電子研發部

4.5 Turn On/Turn Off Delay.

The turn on delay between the +5Vdc outputs reaching 90% of the specified nominal value and the power good signal (logic high) shall be 100ms to 500ms under any combination of operating line and load conditions specified in Section 2.1 and 2.2.2.

桃園市龜山區南上路 350 巷 57 號
NO.57, LANE 350, NANSHANG ROAD, GUISHAN DISTRICT,
TAOYUAN CITY, TAIWAN, R.O.C
TEL: 886-3-3229898 FAX: 886-3-3527317 http://www.in-win.com

The turn off delay between the power good signal (logic low) and the +5Vdc outputs drop out of the regulation limit shall be 1ms minimum under any combination of operating line and load conditions specified in Section 2.1 and 2.2.

4.6 Overshoot at Turn-On/Turn-Off.

The output voltage overshoot upon the application or removal of the input voltage, or the assertion/Reassertion of PS_ON#, under the conditions specified in Section 2.2, shall be less than 10% above the nominal voltage. No voltage of opposite polarity shall be present on any output during turn-on or turn-off.

4.7 Reset after Shut down.

If the power supply latches into a shut down state because of a fault condition on its outputs, the power supply shall return to normal operation only after the fault has been removed and the PS_ON# (or AC input) has been cycled OFF/ON with a minimum OFF time of 3 second.

迎廣科技股份有限公司
110. 12. -8
發行章
研發部

5. Mechanical Requirements.

5.1 Labeling/Marking

Each supply shall be marked with the following, at minimum:
Manufacturer information: manufacturer's name, part number, and lot date code in human-readable text format, etc.
Nominal AC input operating voltages (100-240Vac) and current rating certified by all agencies specified in Section 2.
DC output voltages and current ratings.

5.2 Physical Dimensions

The overall dimension of this power supply is 150mm(L)×81.5mm(W)×40.5mm(H) ref..

5.3 Fan

A 40 mm fan is used.

桃園市龜山區南上路 350 巷 57 號
NO.57, LANE 350, NANSHANG ROAD, GUISHAN DISTRICT,
TAOYUAN CITY, TAIWAN, R.O.C
TEL: 886-3-3229898 FAX: 886-3-3527317 http://www.in-win.com

6. Environmental Requirements.

6.1 Temperature.

Operating ambient	+10℃ Minimum to +40℃ Maximum. (At 70% full load @+40℃, with a maximum temperature rate of change of 5 ℃/10 minutes, but no more than 10℃ /hr.)
Storage shipping ambient	-40℃ Minimum to +70℃ Maximum (Maximum temperature rate of change of 20℃/hr)

6.2 Humidity.

Operating	5% to 85% relative humidity (non-condensing)
Non-operating	5% to 95% relative humidity (non-condensing) Note: 95% RH is achieved with a dry bulb temperature of 55 ℃ and a wet bulb temperature of 54℃.

6.3 Altitude.

Operate	To	10,000 ft.
Non-operating	To	50,000 ft.

迎廣科技股份有限公司
110. 12. -8
發行章
電子研發部

6.4 Vibration Test.

6.4.1 Non-Operating

$0.01g^2$ / Hz at 5 Hz, sloping to $0.02g^2$ / Hz at 20 Hz, and maintaining $0.02g^2$ / Hz from 20Hz to 500Hz. The area under the PSD curve is 3.13 g RMS. The duration shall be 10 minutes per axis for all three axes on all samples.

6.5 Mechanical Shock.

6.5.1 Non-Operating

50 g, trapezoidal input ; velocity change.≧170 in/s
Three drops on each of six faces are applied to each sample.

6.6 Cooling and Acoustics.

The power supply has provided forced air-cooling included fan control circuit for the host system.

桃園市龜山區南上路 350 巷 57 號
NO.57, LANE 350, NANSHANG ROAD, GUISHAN DISTRICT,
TAOYUAN CITY, TAIWAN, R.O.C
TEL: 886-3-3229898 FAX: 886-3-3527317 http://www.in-win.com

7. EMI.

The power supply shall comply with Class B（CE）,FCC.

8. Safety Requirements

This power supply is designed can meet the following spec.

1). **cTUVus**
2). TUV
3). CB
4). BSMI
5). EAC
6). CCC

迎廣科技股份有限公司
110. 12. -8
發行章
電子研發部

9. Reliability

9.1 M.T.B.F

The calculated M.T.B.F shall be 100,000 hours of continuous operation at 25℃, 70% Load, 80% confidence limit and nominal line. The M.T.B.F of the power supply shall be calculated in accordance with MIL-STD-217D/E or BELLCORE. The DC fan is not included.

9.2 AC Cycles

The power supply shall also withstand a minimum of 10000 on/off cycles of and normal input line voltage using the Remote on/off feature

10. Production Testing.

10.1 Hi-Pot Test.

Primary to secondary: 1500Vac for 3 second.
Primary to safety ground: 1500Vac for 3 second.

10.2 Insulation Resistance.

Primary to safety ground: 500Vdc, 25MΩ minimum.

10.3 Leakage Current.

3.5mA maximum at 240Vac 50Hz.

10.4 Earth Grounding Test.

0.1Ω maximum at 25A.