全漢企業股份有限公司
FSP GROUP FSP TECHNOLOGY INC.
台灣桃園市建國東路22號 統一編號：84239055
No. 22, Jianguo East Road., Taoyuan City, Taiwan, R.O.C.
TEL:+886-3-375-9888 Website：www.FSP-group.com
FAX:+886-3-375-6966 Email：sales@fsp-group.com.tw

MECHANICAL DRAWING

文件資料管制
FSP GROUP
禁止翻印外傳

OAD12051591

Released Date:2013/05/10-16:31:12

全漢企業股份有限公司
FSP GROUP FSP TECHNOLGY INC.

REF. ID.	PIN NO.	SIGNAL	WIRE COLOR	GAUGE	CONNECTOR TYPE	CABLE LENGTH
P1	1	+3.3VDC	ORANGE	18	MOLEX 39-01-2240 or EQUIV.	320+30mm -10
	2	+3.3VDC	ORANGE	18		
	3	COM	BLACK	18		
	4	+5VDC	RED	18		
	5	COM	BLACK	18		
	6	+5VDC	RED	18		
	7	COM	BLACK	18		
	8	PW-OK	GRAY	24		
	9	+5Vsb	PURPLE	20		
	10	+12V1	YELLOW	18		
	11	+12V1	YELLOW	18		
	12	+3.3VDC	ORANGE	18		
	13	+3.3VDC +3.3V sense	ORANGE BROWN	18 24		
	14	-12VDC	BLUE	24		
	15	COM	BLACK	18		
	16	PS-ON	GREEN	24		
	17	COM	BLACK	18		
	18	COM	BLACK	18		
	19	COM	BLACK	18		
	20					
	21	+5VDC	RED	18		
	22	+5VDC	RED	18		
	23	+5VDC	RED	18		
	24	COM	BLACK	18		
PA	1	+3.3V	ORANGE	18	MOLEX SD-67582-001 or EQIV.	320+30mm -10
	2	COM	BLACK	18		
	3	+5V	RED	18		
	4	COM	BLACK	18		
	5	+12V	YELLOW	18		
PB PC	1	+12V1	YELLOW	18	AMP 1-480424-0 or EQIV.	155±10mm
	2	COM	BLACK	18		
	3	COM	BLACK	18		
	4	+5V	RED	18		
PD	1	+12V1	YELLOW	22	AMP 171822-4 or EQIV.	155±10mm
	2	COM	BLACK	22		
	3	COM	BLACK	22		
	4	+5V	RED	22		
PE	1	COM	BLACK	18	MOLEX 39-01-2040 or EQIV.	400+30mm -10
	2	COM	BLACK	18		
	3	+12V2	YEL/BLK	18		
	4	+12V2	YEL/BLK	18		
PF	1	+3.3V	ORANGE	18	MOLEX SD-67926-0011 or EQIV.	320+30mm -10
	2	COM	BLACK	18		
	3	+5V	RED	18		
	4	COM	BLACK	18		
	5	+12V	YELLOW	18		
PG	1	+3.3V	ORANGE	20	MOLEX SD-67926-0011 or EQIV.	155±10mm
	2	COM	BLACK	20		
	3	+5V	RED	20		
	4	COM	BLACK	20		
	5	+12V	YELLOW	20		

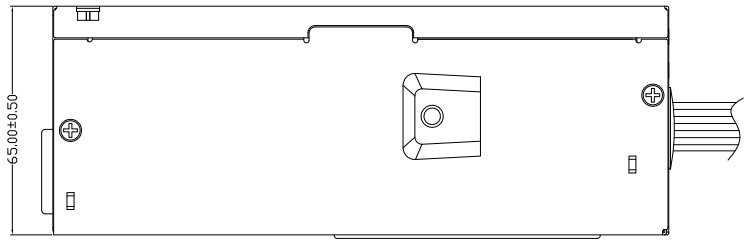

AIR FLOW

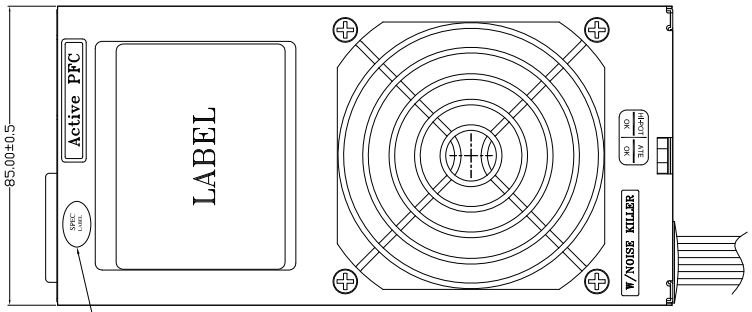

3

AIR FLOW

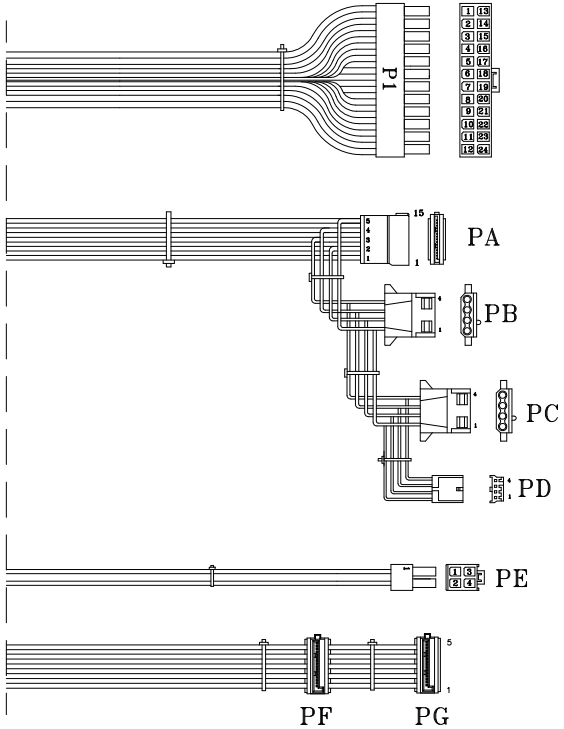

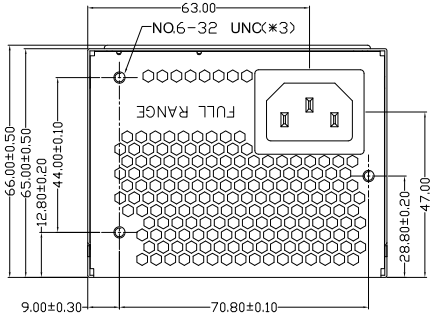

4

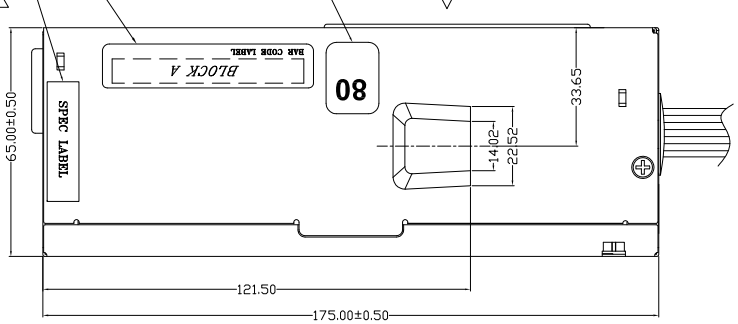

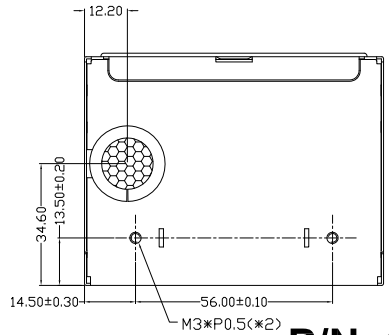

P/N.:9PA300DK08

MODEL NO. : FSP300-60SGV(F04002)	TITLE: ASSY		SHEET: 1□F1	REV:04
R&D(1)	PE	DRAWN	DATE	
			APR.30.2013	

UNIT:mm

Mechanical Drawing(外觀/機構圖)表單編號7000P-0111

文件資料管制 文件資料管制 文件資料管制
發行時間:2013/5/10 4:31 下午
OAD12051591-R4.pdf
1/1禁止翻印外洩