全漢企業股份有限公司
FSP TECHNOLOGY INC.
台灣桃園市桃園區建國東路22號　統一編號：84239055
No. 22, Jianguo E. Rd., Taoyuan Dist., Taoyuan City 330, Taiwan (R.O.C)
TEL:+886-3-375-9888　Website:www.FSP-group.com
FAX:+886-3-375-6966　Email:sales@fsp-group.com.tw

MECHANICAL DRAWING

文件資料管理
禁止翻印外洩 · All rights reserved

OAD08068176

FSP350-80EVMR

Released Date:2016/03/30-18:48:53

文件資料管制 文件資料管制 文件資料管制 All rights reserved

REV.	DATE	UPDATE DESCRIPTION	REMARK	SIGN	APPROVER
01	2008.12.01	NEW REVISIONS.		David	
02	2009.03.25	1.增加左右及後方bracket 2.module左方孔變更		David	
03	2009.09.16	修正 3P CONNECTOR PIN ASSINGMENT		David	
04	2016.03.29	Remove label: Redu OK & HI-POT OK		Erin	

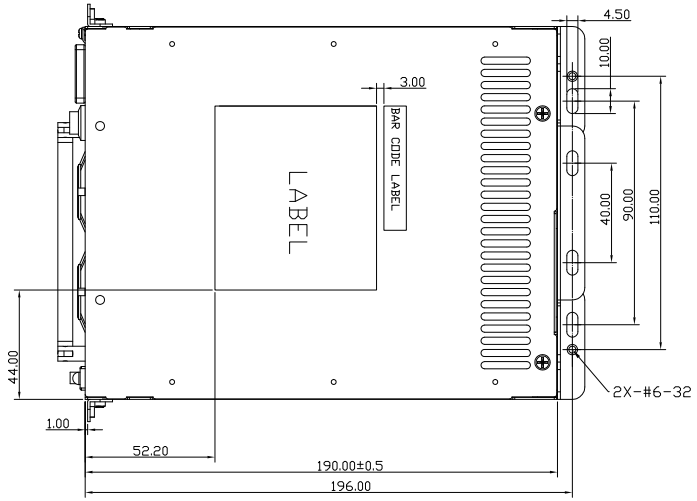

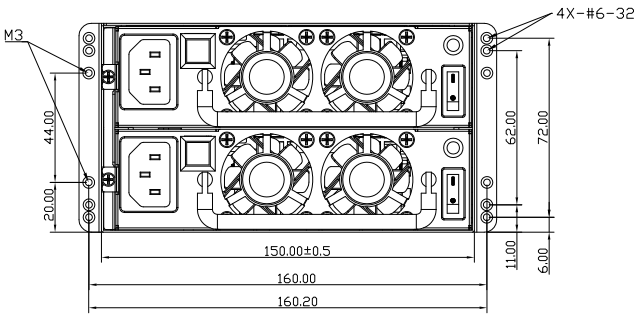

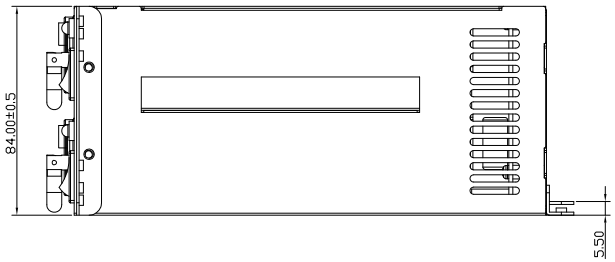

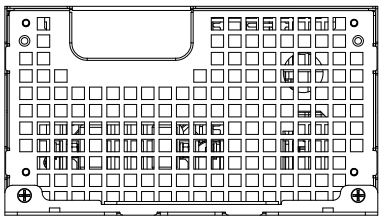

NOTE:

1. ▱平行度必須控制在0.3mm以內。
2. 成品不得有拉料,變形,刮傷,壓痕,油污,銳角,切斷面生鏽等不良現象。
3. 未標註之R角皆為R0.5mm。
4. 毛邊方向向內,最大容許度為0.5%以內。
5. 未標註之公差請依照圖框右下表所示之公差。
6. *為關鍵尺寸,QC檢驗重點。

DIM \ TOL.	Matel	Plastic	USR
0~6	0.10	0.10	
6~30	0.15	0.15	
30~120	0.20	0.25	
120~300	0.25	0.40	
300~600	0.40	0.60	
600~1200	0.70	0.80	
±		Ang. Tol	1°

ITEM	PART NO.	PART NAME	Color	Artwork or Spec.	REMARK

MATERIAL (SPEC.): SPCC T=0.8 mm
QUANTITY /SET: pc.
FINISH: Ni
SCALE: 1/1
UNIT: mm
SHEET SIZE: A1

全漢企業股份有限公司 FSP TECHNOLOGY INC.

DESCRIPTION: OUTLINE

MODEL NO.	DRAWING NO.	SHEET
FSP350-80EVMR	9YR3500600	1 OF 1

DESIGNED | CHECKED | APPROVED

建立時間:2016/3/30 6:48 下午
OAD08068176-R7.pdf
1/3禁止翻印外洩 All rights reserved

文件資料管制 文件資料管制 文件資料管制 All rights reserved

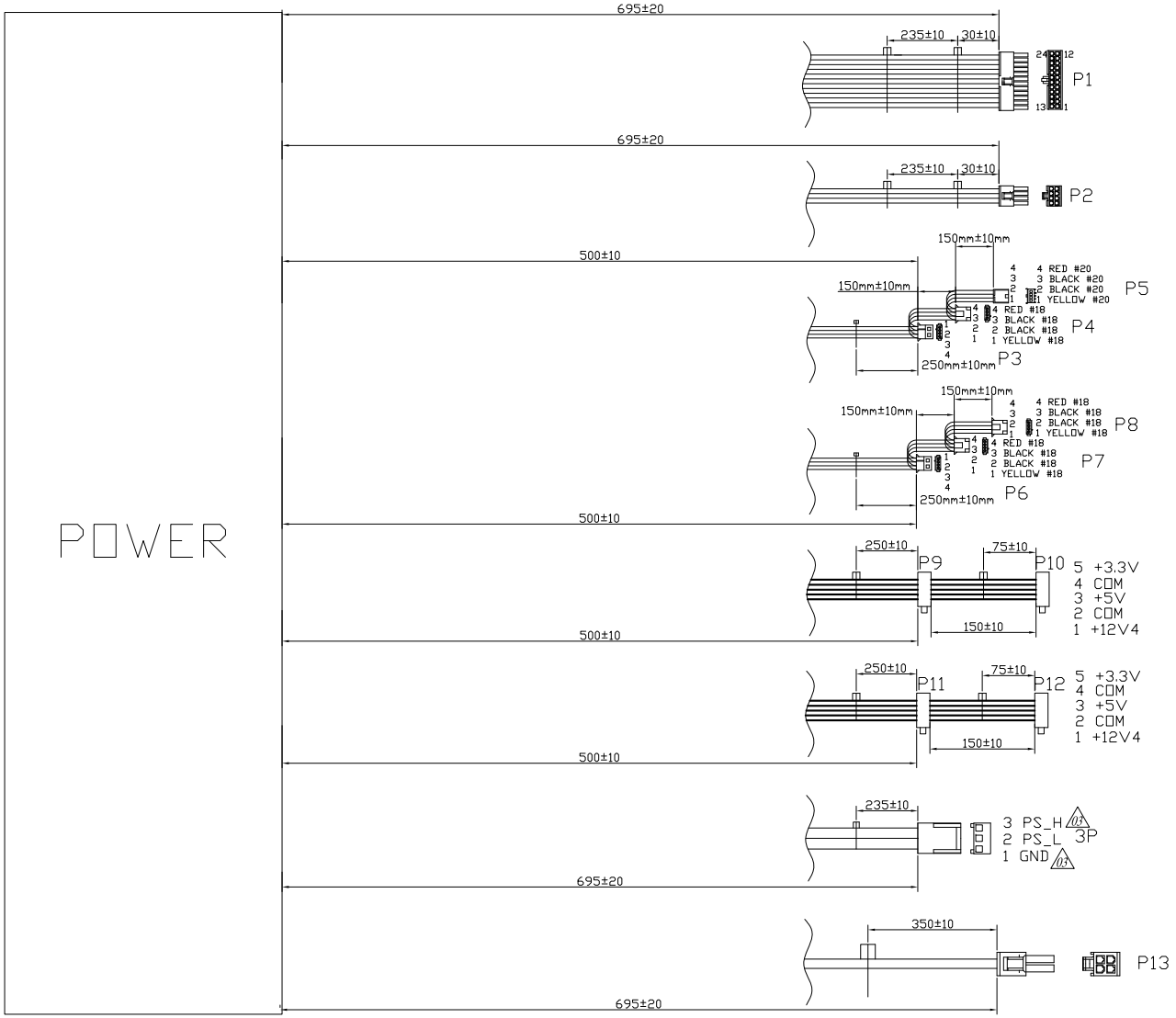

ITEM	PART NO.	PART NAME	Color	Artwork or Spec.	REMARK

MATERIAL (SPEC.)

FINISH

QUANTITY /SET: pc.

SCALE: 1/1

UNIT: mm

SHEET SIZE: A1

全漢企業股份有限公司 FSP TECHNOLOGY INC.

DESCRIPTION: OUTLINE

MODEL NO.	DRAWING NO.	SHEET
FSP350-80EVMR	9YR3500600	2 OF 3

DESIGNED | CHECKED | APPROVED

SELECT v DIM. \ TOL.	Matel	Plastic	USR
0~6	0.10	0.10	
6~30	0.15	0.15	
30~120	0.20	0.25	
120~300	0.25	0.40	
300~600	0.40	0.60	
600~1200	0.70	0.80	
±		Ang. Tol	1°

建立時間:2016/3/30 6:48 下午
OAD08068176-R7.pdf
2/3禁止翻印外洩 All rights reserved

文件資料管制 文件資料管制 文件資料管制 All rights reserved

CONNECTOR	PIN	COLOR	FUNCTION	WIRE/AWG
P1	1	ORANGE	+3.3 VDC	UL1007 / 18#
	1-1	ORANGE/WHITE Stripe	3.3RS	UL1007 / 22#
	2	ORANGE	+3.3 VDC	UL1007 / 18#
	3	BLACK	COM	UL1007 / 18#
	4	RED	+5 VDC	UL1007 / 18#
	5	BLACK	COM	UL1007 / 18#
	6	RED	+5 VDC	UL1007 / 18#
	7	BLACK	COM	UL1007 / 18#
	8	GRAY	PWR OK	UL1007 / 22#
	9	PURPLE	5 VSB	UL1007 / 18#
	N/C	N/C	N/C	N/C
	10	YELLOW	+12 V1	UL1007 / 18#
	10-1	YELLOW/WHITE Stripe	12VRS	UL1007 / 22#
	11	YELLOW	+12 V1	UL1007 / 18#
	12	ORANGE	+3.3 VDC	UL1007 / 18#
	13	ORANGE	+3.3 VDC	UL1007 / 18#
	14	BLUE	-12 VDC	UL1007 / 22#
	15	BLACK	COM	UL1007 / 18#
	16	GREEN	PS_ON	UL1007 / 22#
	17	BLACK	COM	UL1007 / 18#
	18	BLACK	COM	UL1007 / 18#
	N/C	N/C	N/C	N/C
	19	BLACK	COM	UL1007 / 18#
	20	WHITE	-5 VDC	UL1007 / 22#
	21	RED	+5 VDC	UL1007 / 18#
	21-1	RED/WHITE Stripe	5VRS	UL1007 / 22#
	22	RED	+5 VDC	UL1007 / 18#
	23	RED	+5 VDC	UL1007 / 18#
	24	BLACK	COM	UL1007 / 18#

CONNECTOR	PIN	COLOR	FUNCTION	WIRE/AWG
P2	1	BLACK	COM	UL1007 / 18#
	2	BLACK	COM	UL1007 / 18#
	3	BLACK	COM	UL1007 / 18#
	4	BLACK	COM	UL1007 / 18#
	5	YELLOW/BLACK Stripe	+12 V2	UL1007 / 18#
	6	YELLOW/BLACK Stripe	+12 V2	UL1007 / 18#
	7	YELLOW/BLUE Stripe	+12 V3	UL1007 / 18#
	8	YELLOW/BLUE Stripe	+12 V3	UL1007 / 18#

CONNECTOR	PIN	COLOR	FUNCTION	WIRE/AWG
P3	1	YELLOW	+12V1	UL1007 / 18#
	2	BLACK	COM	UL1007 / 18#
	3	BLACK	COM	UL1007 / 18#
	4	RED	+5 VDC	UL1007 / 18#

CONNECTOR	PIN	COLOR	FUNCTION	WIRE/AWG
P6	1	YELLOW	+12V1	UL1007 / 18#
	2	BLACK	COM	UL1007 / 18#
	3	BLACK	COM	UL1007 / 18#
	4	RED	+5 VDC	UL1007 / 18#

CONNECTOR	PIN	COLOR	FUNCTION	WIRE/AWG
P9	1	YELLOW	+12V1	UL1007 / 18#
	2	BLACK	COM	UL1007 / 18#
	3	RED	+5 VDC	UL1007 / 18#
	4	BLACK	COM	UL1007 / 18#
	5	ORANGE	+3.3 VDC	UL1007 / 18#

CONNECTOR	PIN	COLOR	FUNCTION	WIRE/AWG
P11	1	YELLOW	+12V1	UL1007 / 18#
	2	BLACK	COM	UL1007 / 18#
	3	RED	+5 VDC	UL1007 / 18#
	4	BLACK	COM	UL1007 / 18#
	5	ORANGE	+3.3 VDC	UL1007 / 18#

CONNECTOR	PIN	COLOR	FUNCTION	WIRE/AWG
3P	1	03 BLACK	GND	UL1007 / 22#
	2	GREEN	PS_L	UL1007 / 22#
	3	03 RED	PS_H	UL1007 / 22#

CONNECTOR	PIN	COLOR	FUNCTION	WIRE/AWG
P13	1	BLACK	COM	UL1007 / 18#
	2	BLACK	COM	UL1007 / 18#
	3	YELLOW/BLACK Stripe	+12V2	UL1007 / 18#
	4	YELLOW/BLUE Stripe	+12V3	UL1007 / 18#

ITEM	PART NO.	PART NAME	Color	Artwork or Spec.	REMARK

MATERIAL (SPEC.)

FINISH

QUANTITY /SET: pc.

SCALE: 1/1

UNIT: mm

SHEET SIZE: A1

全漢企業股份有限公司 FSP TECHNOLOGY INC.

DESCRIPTION: OUTLINE

SELECT v DIM. \ TOL.	Matel	Plastic	USR
0~6	0.10	0.10	
6~30	0.15	0.15	
30~120	0.20	0.25	
120~300	0.25	0.40	
300~600	0.40	0.60	
600~1200	0.70	0.80	
±		Ang. Tol	1°

MODEL NO.	DRAWING NO.	SHEET
FSP350-80EVMR	9YR3500600	3 OF 3

DESIGNED	CHECKED	APPROVED

建立時間:2016/3/30 6:48 下午
OAD08068176-R7.pdf
3/3禁止翻印外洩 All rights reserved